CFD Post-Processing

for unsteady state analysis

COPY COMPLIANT to the original document resident on the computer system at the time of printing

Index

1. Purpose & Scope 3

2. Abbreviations 3

3. General procedure: description 4

4. Post processing settings 6

4.1. Locator 6

4.2. Transient Variables 6

4.3. Expressions: Monitored 7

4.4. *Expressions: Derived variables* 10

4.5. Expressions: Verify expression 12

5. Post processing outcomes 14

5.1. Pressure and velocity contours 14

5.2. Streamlines visualization 14

5.3. Extra data 14

5.4. *Report Viewer* 14

5.5. Probe: pressure pulsation 14

5.6. Video creation 20

6. Acceptance criteria 24

7. Limitations 26

8. References 27

COPY COMPLIANT to the original document resident on the computer system at the time of printing

1. Purpose & Scope

The document describes a guideline for post-processing the results obtained from a CFD unsteady state simulation applied to centrifugal pumps.

This procedure is applicable to any centrifugal pump type, single or multistage, single or double suction, in diffuser or volute.

This procedure is applicable to Nova Milanese plant and La Spezia plant.

2. Abbreviations

Abbreviations/ Acronyms	Unit of Measurement (if applicable)	Description
LE		Leading edge of the impeller's blades
TE		Trailing edge of the impeller's blades
PS		Pressure side of the impeller's blades
SS		Suction side of the impeller's blades
D2	[mm or in]	Maximum external diameter of the impeller
D1	[mm or in]	Impeller's eye diameter
Dh	[mm or in]	Diameter of the shaft's impeller
Zla		Number of impeller blades
Nq or Ns		Specific speed of the pump
Eta	[%]	Efficiency
Q	[m^3/h]	Flowrate
H	[m]	Head
n	[rpm]	Speed of the pump
ω	[rad-1]	Rotating angular velocity
NPSH		Net Positive Suction Head
CFD		Computational Fluid Dynamics
BC		Boundary Condition
CP		Complete Pump model
CPnobl		Complete Pump without balancing line model
1ST		First Stage model
SYM		Symmetric Pump model
STnext		Next Stage model
STlast		Last Stage model
U	[m/s or ft/s]	Peripheral velocity
C	[m/s or ft/s]	Absolute velocity
W	[m/s or ft/s]	Relative velocity
ALFA	[degree]	Angle of the fluid in the absolute reference system
R	[mm or in]	Radius
P	[Pa or psi]	Pressure
DE		Drive end side
NDE		Non drive end side
SI (MKS)		International System of Units (Meter, Kilogram, Second)
RSI		Rotor Stator Interaction
FFT		Fast Fourier Transform

COPY COMPLIANT to the original document resident on the computer system at the time of printing

3. General procedure: description

The pump models that can be post-processed in this guideline are listed below:

High fidelity (complete pump)	Simplified model
• CP • CPnobl	• 1ST • SYM • STnext • STlast

Table 1 : list of CFD models

These pump models constitute the complete pump or a portion of it.

The subsequent specific discussion has the aim to provide the user with the necessary information and recommended criteria to:

- Estimate the performance of pump.
- Critically evaluate post-processing results on pump components like the impeller, casing or diffuser.
- Support the designer in optimizing hydraulic parts.
- Estimate force and torque applied to the pump.
- Provide pressure maps of pump components (i.e. impellers) for structural analysis.

An example of one of the models that can be post processed is illustrated in *Figure 1.*

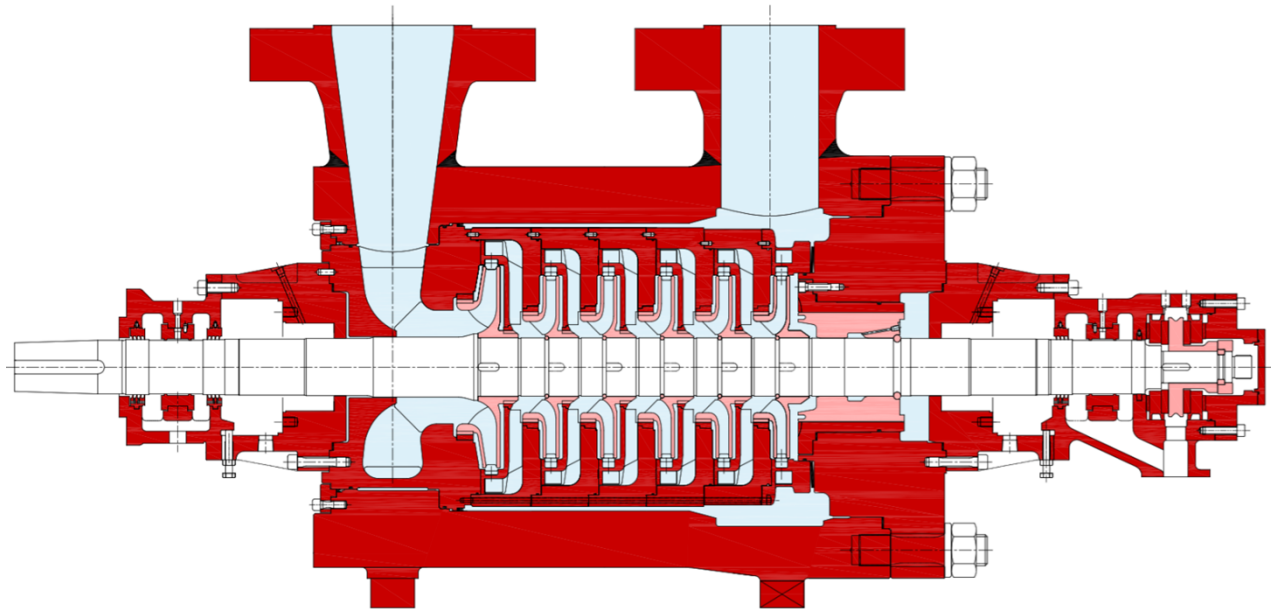

Figure 1: CP model examined

COPY COMPLIANT to the original document resident on the computer system at the time of printing

The post processing results are based on the outcomes of the CFD analysis derived from the settings described in the **SOP-533** "*CFD Pre-Processor for unsteady state analysis*" [4].

This procedure is complementary to the **SOP-551** "*CFD Post-Processing for Impeller Passages" [3]* and considers mainly the post processing of all static parts and the overall performance of the pump.

For sake of brevity, some chapters inside the "Post processing settings" and "Post processing outcomes" of **SOP-552** *"CFD Post-Processing for steady state analysis" [5]* are only cited.

For the reasons mentioned above, only the topics and results that cannot be extracted in a steady state simulation are discussed in this procedure.

COPY COMPLIANT to the original document resident on the computer system at the time of printing

4. Post processing settings

4.1. Locator

Refer to the **SOP-552** *"CFD Post-Processing for steady state analysis" [5]*

The correct position of the pressure probe (static pressure) is shown in *Figure 2*. It must be allocated between TE of the impeller (outlet of the impeller) and LE of the diffuser blade or volute (inlet of diffuser or volute).

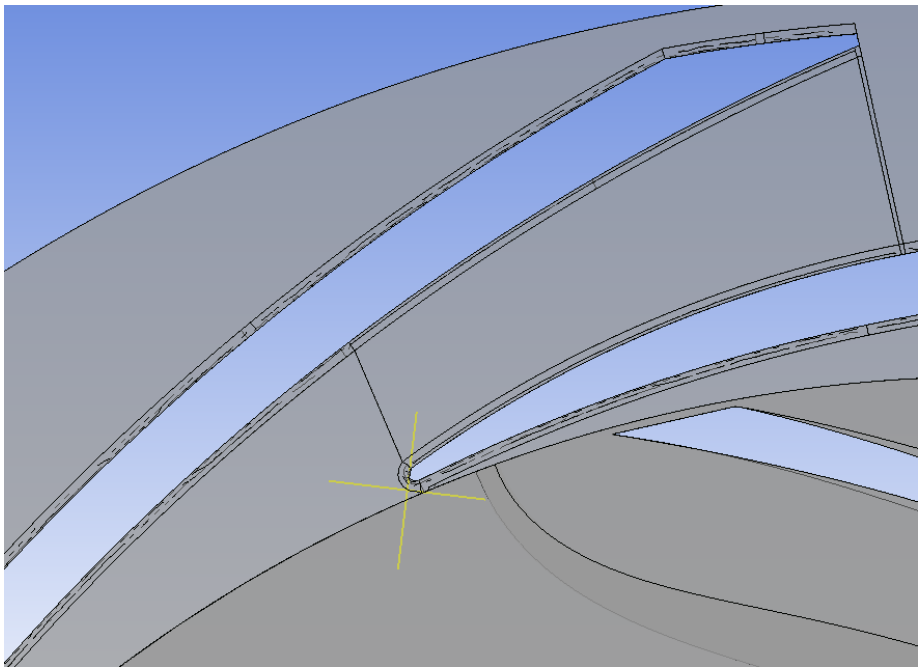

Figure 2: Pressure Probe

4.2. Transient Variables

For this type of simulation, the fluid dynamic variables, in addition to being unsteady, can refer to the absolute reference system or to the rotating reference system; the variables that are sufficient and necessary to be able to solve the fluid dynamic problem are the following:

Variables	Unit	Name variables	Coordinate System	type
P	[Pa]	Pressure static	Absolute (Static)	unsteady
Ptot	[Pa]	Total Pressure	Absolute (Static)	unsteady
Ptot_StnF	[Pa]	Total Pressure in Stn Frame	Relative System (Rotor)	unsteady
C	[m/s]	Velocity	Absolute (Static)	unsteady
W	[m/s]	Velocity in Stn Frame	Relative System (Rotor)	unsteady
U	[m/s]	Peripheral Velocity	Absolute (Static)	steady U= ω *R
τ_w	[Pa]	Wall Share Stress		unsteady

Table 2 : Transient variables

COPY COMPLIANT to the original document resident on the computer system at the time of printing

According to turbomachinery theory, the relationship between the variables is as follows:

$$P_{tot} = P + 0.5 * \rho * C^2$$

$$\vec{C} = \vec{W} + \vec{U}$$

$$\tau_w = -\mu * \left.\frac{dc}{dn}\right|_{n=0}$$

where $\boldsymbol{\mu}$ is dynamic viscosity and **n** is the perpendicular direction of wall.

If the expressions are calculated externally of the tool, it is necessary that the just described variables are averaged over time; from the settings of **SOP-533** *"CFD Pre-Processor for unsteady state analysis" [4],* generally 6 rotations of the rotor are sufficient to bring the calculation to convergence.

The company practice is to perform the time average on the last two rotations.

4.3. Expressions: Monitored

Using Locators and Transient Variables, the following expressions can be formulated (the relative SI (MKS) units of measurement are inserted in brackets):

$$g = 9.81 \left[\frac{m}{s^2}\right] \qquad \text{(gravitational acceleration)}$$

$$\rho = 997 \left[\frac{kg}{m^3}\right] \qquad \text{(density of water at Tamb=25°C)}$$

$$\omega = \frac{2 * \pi * n\,[rpm]}{60} \qquad \text{(angular velocity)}$$

$$n = rotational\ speed\ [rpm]$$

$$P_{min} = minimum\ value\ (Pressure\ [Pa])@blade_surface_first_imp$$

$$H_{imp}[m] = \frac{Ptot@outlet_imp\ [Pa] - Ptot@inlet_imp[Pa]}{g\left[\frac{m}{s^2}\right] * \rho\left[\frac{kg}{m^3}\right]}$$

$$H_{st}[m] = \frac{Ptot@outlet_st\ [Pa] - Ptot@inlet_st[Pa]}{g\left[\frac{m}{s^2}\right] * \rho\left[\frac{kg}{m^3}\right]}$$

COPY COMPLIANT to the original document resident on the computer system at the time of printing

$$H_{pump}[m] = \frac{Ptot@outlet_pump\ [Pa] - Ptot@inlet_pump[Pa]}{g\left[\frac{m}{s^2}\right] * \rho\left[\frac{kg}{m^3}\right]}$$

$$P_{imp}[W] = Torque@(hub,blade,shroud,disk_{wall})[N*m] * \omega\ [s^{-1}]$$

$$P_{st}[W] = Torque@(hub.blade,shroud,disk_{wall},otherWallrot)[N*m] * \omega\ [s^{-1}]$$

$$P_{pump} = \Sigma_1^n Pst_n$$ (where n is number of stage)

$$ETA_{imp} = \frac{MassFlow@imp\left[\frac{kg}{s}\right] * g\left[\frac{m}{s^2}\right] * H_{imp}[m]}{P_{imp}[W]}$$

$$ETA_{st} = \frac{MassFlow@st\left[\frac{kg}{s}\right] * g\left[\frac{m}{s^2}\right] * H_{st}[m]}{P_{st}[W]}$$

$$ETA_{pump} = \frac{MassFlow@pump\left[\frac{kg}{s}\right] * g\left[\frac{m}{s^2}\right] * H_{pump}[m]}{P_{pump}[W]}$$

$$Losses_{suction}[m] = \frac{Ptot@outlet_suct\ [Pa] - Ptot@inlet_suct[Pa]}{g\left[\frac{m}{s^2}\right] * \rho\left[\frac{kg}{m^3}\right]}$$

$$Losses_static_{stage}[m] = \frac{Ptot@inlet_imp_next\ [Pa] - Ptot@outlet_imp[Pa]}{g\left[\frac{m}{s^2}\right] * \rho\left[\frac{kg}{m^3}\right]}$$

$$Losses_{discharge}[m] = \frac{Ptot@outlet_pump\ [Pa] - Ptot@outlet_last_imp[Pa]}{g\left[\frac{m}{s^2}\right] * \rho\left[\frac{kg}{m^3}\right]}$$

$$Losses_balance_{line}[m] = \frac{Ptot@outlet_bl\ [Pa] - Ptot@inlet_bl[Pa]}{g\left[\frac{m}{s^2}\right] * \rho\left[\frac{kg}{m^3}\right]}$$

$$Fx_{imp} = Force_x@(hub.blade,shroud,disk_{wall})[N]$$

$$Fy_{imp} = Force_y@(hub.blade,shroud,disk_{wall})[N]$$

COPY COMPLIANT to the original document resident on the computer system at the time of printing

$$Fz_{imp} = Force_z@(hub.blade,shroud,disk_{wall})[N]$$

$$Fx_{st} = Force_x@(hub.blade,shroud,disk_{wall},otherWallrot)[N]$$
$$Fy_{st} = Force_y@(hub.blade,shroud,disk_{wall},otherWallrot)[N]$$
$$Fz_{st} = Force_z@(hub.blade,shroud,disk_{wall},otherWallrot)[N]$$

$$Fx_{pump} = \sum_1^n Fx_st_n + Fx_bl$$ (where n is number of stage)

$$Massflow_{inlet} = Massflow@(inlet_pump)\left[\frac{kg}{s}\right]$$

$$Massflow_{outlet} = Massflow@(outlet_pump)\left[\frac{kg}{s}\right]$$

$$Massflow_{leakimp} = Massflow@(leakage_imp)\left[\frac{kg}{s}\right]$$

$$Massflow_{leakst} = Massflow@(leakage_interstage)\left[\frac{kg}{s}\right]$$

$$Massflow_{leakbl} = Massflow@(leakage_balance_line)\left[\frac{kg}{s}\right]$$

Below a short description of the main variables:

- **Pmin**: is the minimum local pressure detected on the surface of the impeller's blade at the first stage.
  This variable provides qualitative and preliminary information about the entity of the cavitation phenomenon. By measuring the local pressure and considering the relative saturation pressure of the fluid in its thermodynamic conditions, it is possible to predict and deduce which impeller is best suited to satisfy the required NPSH.
  A careful evaluation and quantification of the NPSH is possible only by using cavitating models.
- **Himp**, **Hst**, **Hpump**: are the head obtained by the impeller, stage and pump respectively.
- **Pimp**, **Pst**, **Ppump**: are the power absorbed by the impeller, stage and the rotor group respectively.
- **Etaimp**: is the impeller's efficiency calculated considering the impeller's head, mass flow and the power absorbed only by the impeller.

COPY COMPLIANT to the original document resident on the computer system at the time of printing

- **Etast**: is the stage's efficiency calculated considering the stage's head, mass flow and the power absorbed by the impeller and other rotor surfaces.
- **Etapump**: is the pump's efficiency calculated considering the pump's head, mass flow and the power absorbed by the rotor group surfaces.
- **Losess_suction**, **Losses_stage**, **Losses_discharge**, **Losess_balance_line**: are the losses of the static components.
- **Fimp(x,y,z)**; **Fst(x,y,z)**; **Fpump(x,y,z)**: are the force applied on the impeller, on all hydraulic rotor surfaces in the stage and on all rotor surfaces in the pump (*Figure 3*).

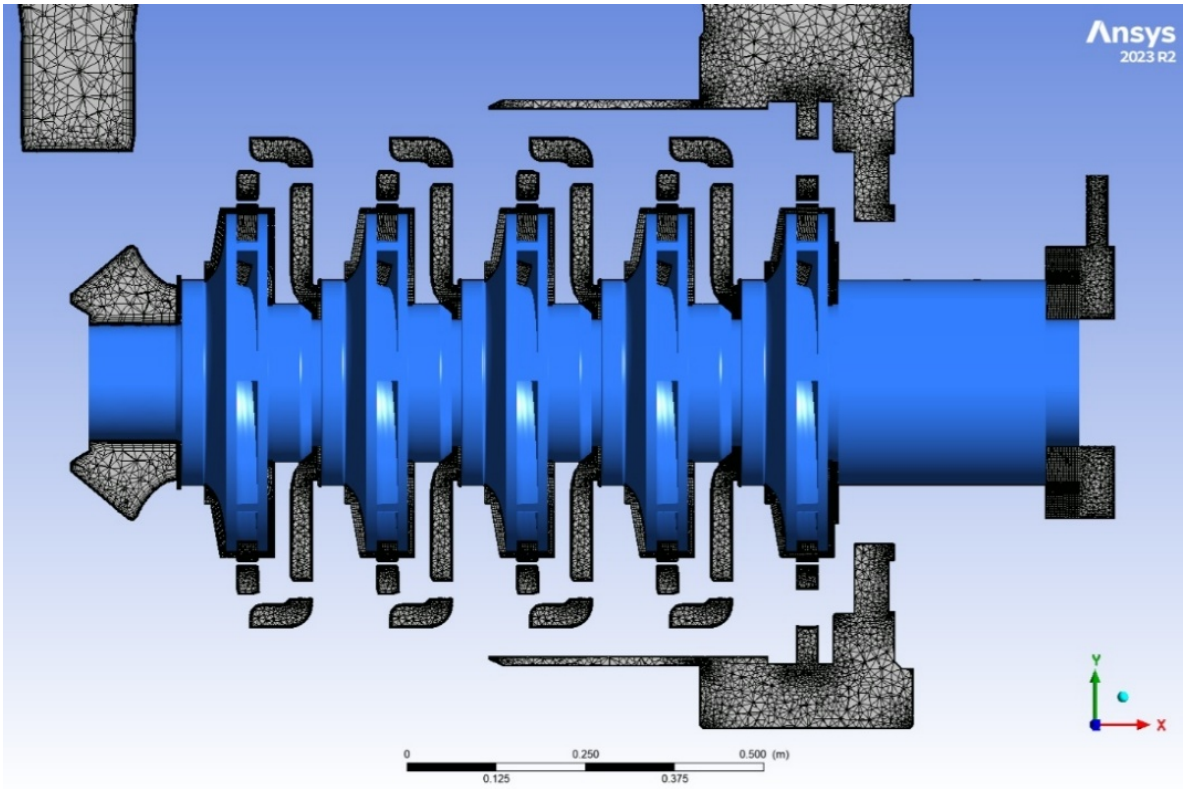

Figure 3: CP model, all hydraulic rotor surfaces in the pump are in color blue

4.4. *Expressions: Derived variables*

In addition to the expressions and variables set to make a more detailed post, and to use the features that will be described, it is necessary to define the following derived variables (*Figure 4*) in the coordinate system (X, Y, Z):

- **Cu**: tangential velocity of the fluid in the relative reference system.
- **Cm**: meridian velocity of the fluid in the relative reference system.
- **Cr**: radial velocity of the fluid in the relative reference system.

COPY COMPLIANT to the original document resident on the computer system at the time of printing

- **Alpha**: angle of the fluid in the absolute reference system.

If the rotational axis of the pump is **X**, the relative expressions are:

$$R = \sqrt{Y^2 + Z^2}$$

$$C_u = \frac{(C_z * Y - C_y * Z)}{R}$$

$$C_r = \frac{(C_y * Y + C_z * Z)}{R}$$

$$C_m = \sqrt{C_r^{\ 2} + C_x^{\ 2}}$$

$$Alfa = \tan^{-1}\left(\frac{C_u}{C_m}\right)$$

If the rotational axis of the pump is **Y**, the relative expressions are:

$$R = \sqrt{X^2 + Z^2}$$

$$C_u = \frac{(C_x * Z - C_z * X)}{R}$$

$$C_r = \frac{(C_x * X + C_z * Z)}{R}$$

$$C_m = \sqrt{C_r^{\ 2} + C_y^{\ 2}}$$

$$Alfa = \tan^{-1}\left(\frac{C_u}{C_m}\right)$$

If the rotational axis of the pump is **Z**, the relative expressions are:

$$R = \sqrt{X^2 + Y^2}$$

$$C_u = \frac{(C_x * Y - C_y * X)}{R}$$

$$C_r = \frac{(C_x * X + C_y * Y)}{R}$$

$$C_m = \sqrt{C_r^{\ 2} + C_z^{\ 2}}$$

$$Alfa = \tan^{-1}\left(\frac{C_u}{C_m}\right)$$

COPY COMPLIANT to the original document resident on the computer system at the time of printing

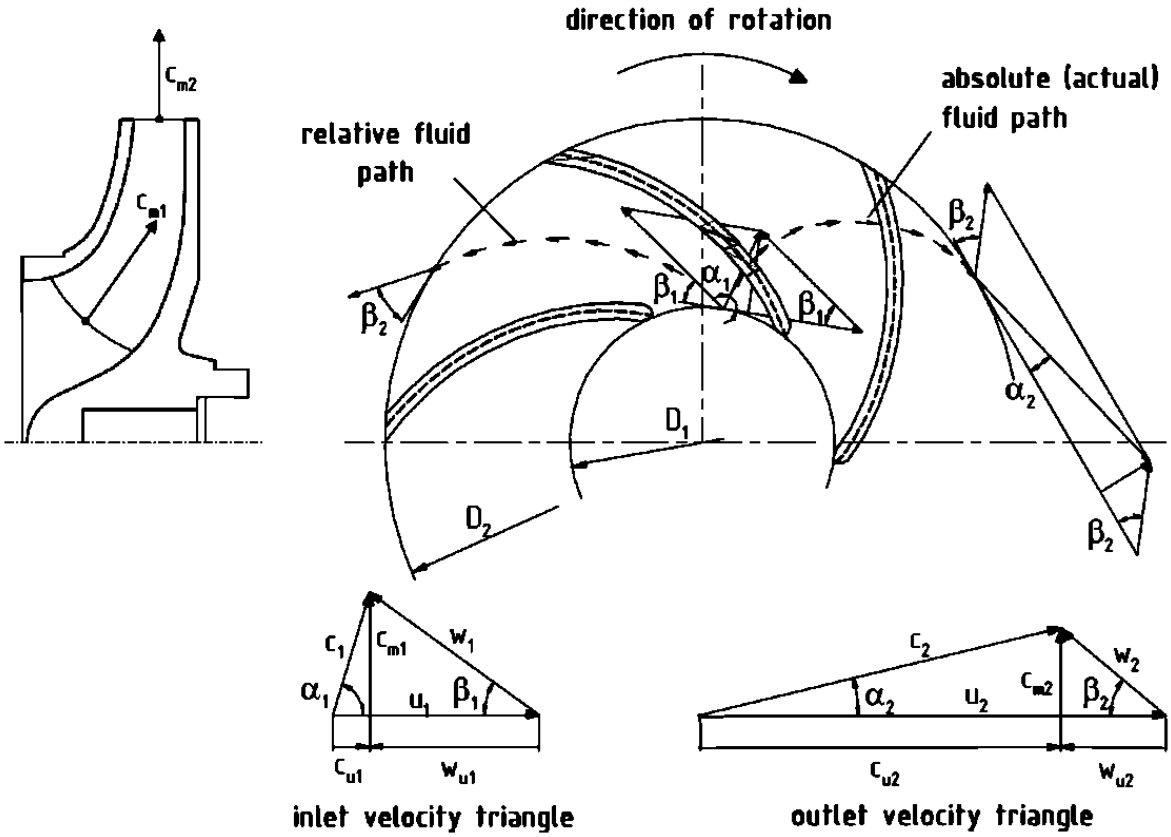

Figure 4: Characteristic velocity triangles

4.5. Expressions: Verify expression

It is also possible to insert verification expressions, which allow to check and verify the correctness of the continuity equations. In *Figure 5*, the different circulation flow rates are shown and identified, in addition to the pump's flow rate.

COPY COMPLIANT to the original document resident on the computer system at the time of printing

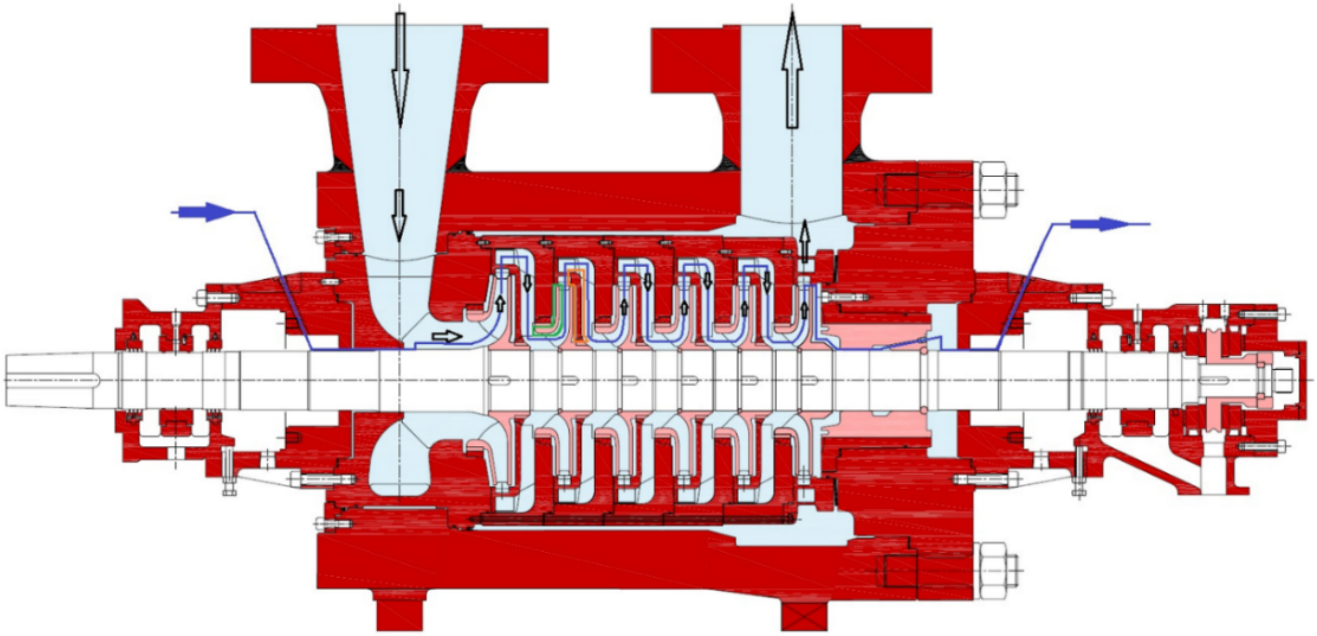

ZOOM	LEGEND
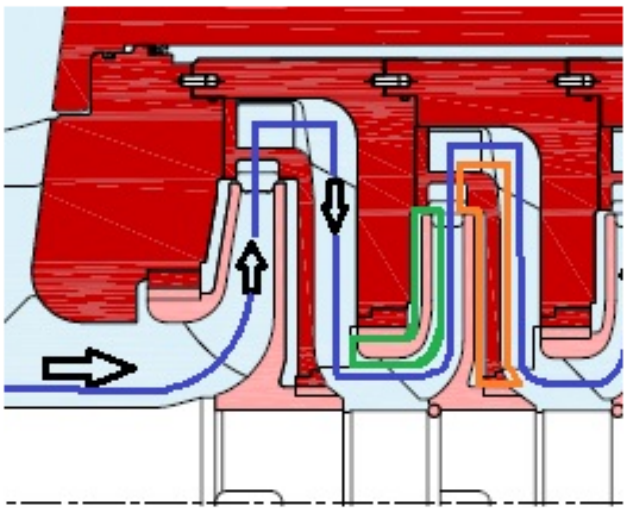	MassFlowPump MassFlowLeakageBalanceLine MassFlowLeakageWearRingFront (counterclockwise) MassFlowLeakageWearRingInterstage (clockwise)

Figure 5: CP model with mass flow circulation

The equations that need to be verified are presented below:

$$Massflow_{inlet} = Massflow_{outlet} = Massflow_{pump}$$

$$Massflow_{imp} = Massflow_{pump} + Massflow_{leakF} + Massflow_{bl}$$

$$Massflow_{diff} = Massflow_{pump} + Massflow_{leakR} + Massflow_{bl}$$

$$Massflow_{diff_last} = Massflow_{pump}$$

COPY COMPLIANT to the original document resident on the computer system at the time of printing

Another check concerns all the interfaces of the entire model; the pressure values between the two sides of each single interface must be identical, (an information transfer error of ± 0.1% is acceptable as well).

5. Post processing outcomes

5.1. Pressure and velocity contours

Refer to the **SOP-552** *"CFD Post-Processing for steady state analysis" [5].*

5.2. Streamlines visualization

Refer to the **SOP-552** *"CFD Post-Processing for steady state analysis" [5].*

5.3. Extra data

Refer to the **SOP-552** *"CFD Post-Processing for steady state analysis" [5].*

5.4. *Report Viewer*

Refer to the **SOP-552** *"CFD Post-Processing for steady state analysis" [5].*

5.5. Probe: pressure pulsation

The introduction of measuring probes inside the pump allows to measure and estimate the intensity and frequency of pressure fluctuations. These non-uniform pressure fields (in space and time) are generated mainly between the impeller outlet and the vanes of the diffuser or the cutwater of the volute (*Figure 6*).

This phenomenon is called Rotor-Stator Interaction (RSI); due to RSI, hydraulic forces are generated giving rise to pressure pulsations, which cause mechanical vibrations and alternating forces on various components of the pump.

COPY COMPLIANT to the original document resident on the computer system at the time of printing

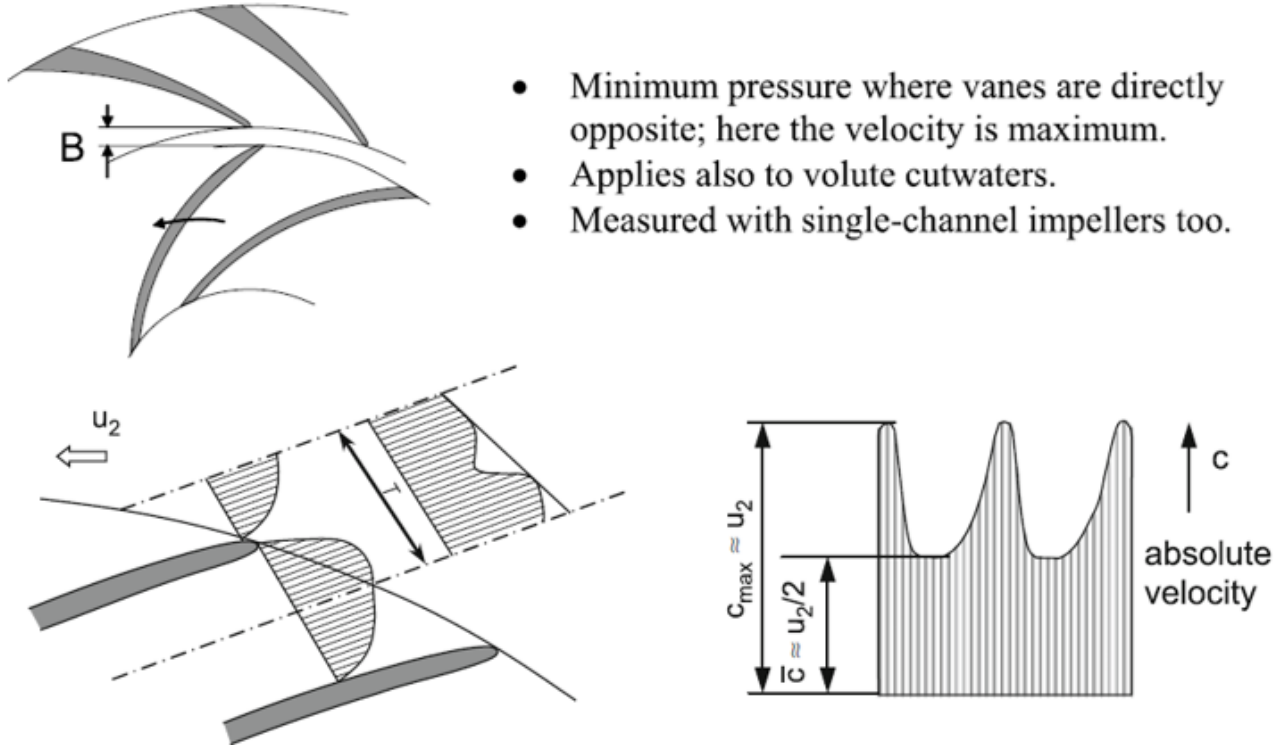

Figure 6: Rotor-Stator Interaction and velocity distribution at the impeller outlet

Pressure pulsations are mainly generated by the impact of the wake downstream of the impeller's Trailing Edge on the diffuser/cutwater vanes, which creates frequencies corresponding to the blade's passing frequency (f=(n/60)*Zla) and its harmonics.

With some combinations of the number of impeller blades and the number of diffuser (or cutwater) blades, the pressure pulsations of two or more blades can be in phase and amplify each other through a resonance phase. In contrast, vortices in a separated flow and turbulence have a stochastic behavior. Their effects do not show up as sharp frequencies but produce more of a continuous spectrum over a certain frequency domain. These are called "broad band" pressure pulsations (or white noise). In an attached flow, turbulent fluctuations are a weak source of pressure pulsations.

The first step to analyze the extracted pressure probe results is to perform the Fast Fourier Transform (FFT) of the obtained time-varying signal (*Figure 7*).

COPY COMPLIANT to the original document resident on the computer system at the time of printing

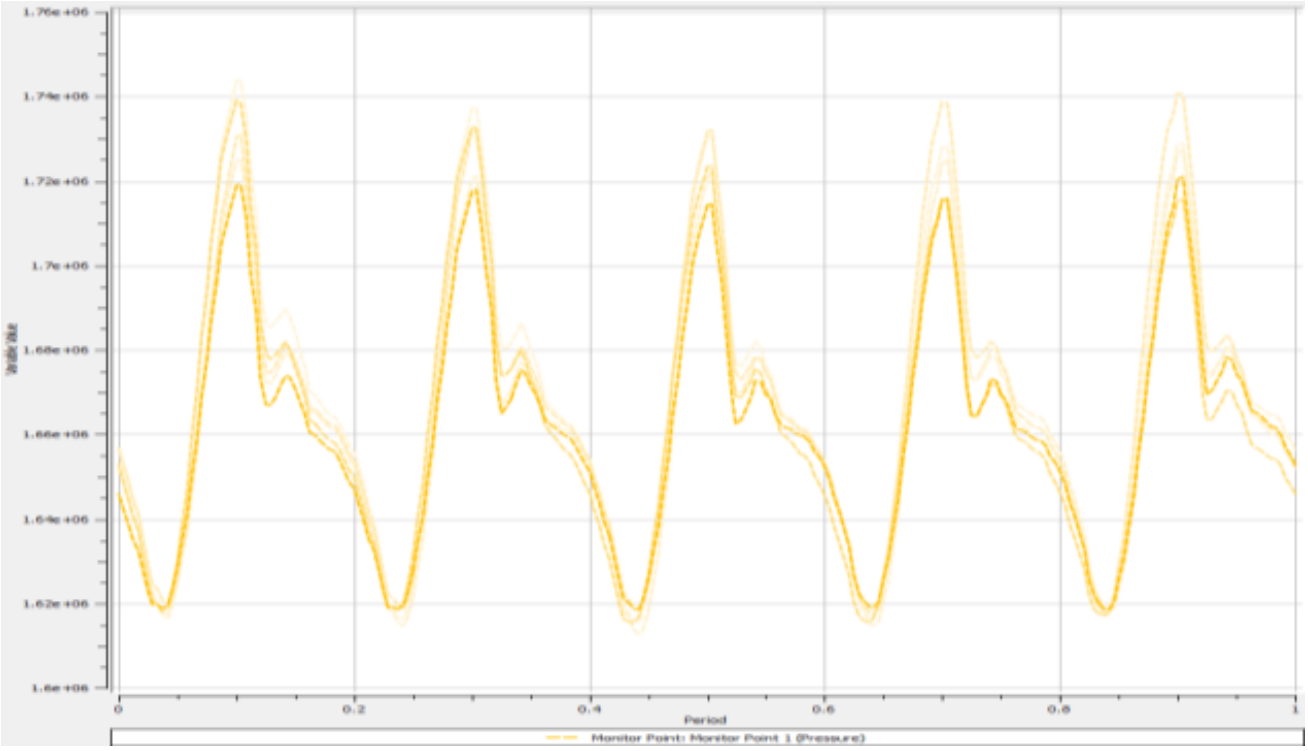

Figure 7: Static pressure signal recorded by the pressure probe

A specific case where it is possible to directly extract the FFT using the CFX Post tool in the Ansys environment [6] is shown below.

The procedure and setting to set are as follows:

1. Create a new "Chart 1".
2. Select "*XY-Transient or Sequence*" (*Figure 8*).
3. Activate the "*Subtract mean*" checkbox (*Figure 8*), which subtracts the mean from each value to show the amplitude of the signal "noise" more clearly.
4. "*Modify Input Signal Filter*" allows to choose the signal filter. By default, the "*Hanning method*" is selected (*Figure 8*).
5. Uncheck "*Full range of input data*" and manually set the time interval of the simulation to perform the FFT of the signal. In this case, we chose to perform the FFT of the signal only on the last 6 rotations of the simulation (from 2 rotations/2980rpm*60 → Min=0.040268456 to 8 rotations/2980rpm*60 →Max=0.161074 s), refer to *Figure 9*.

COPY COMPLIANT to the original document resident on the computer system at the time of printing

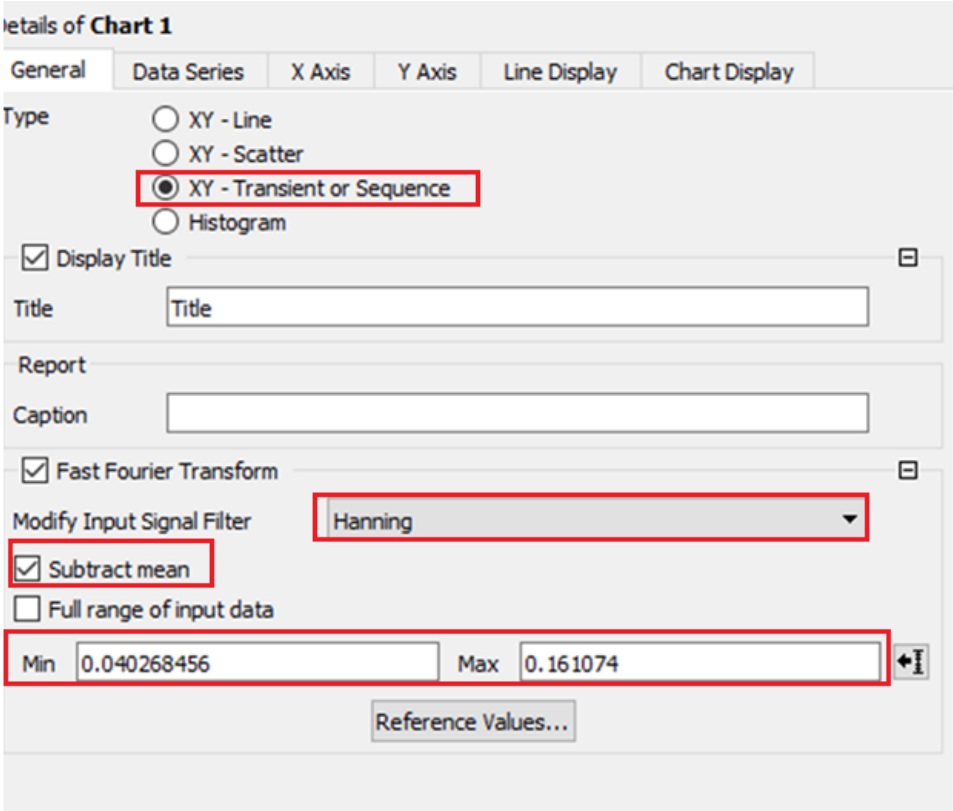

Figure 8: Creating the FFT Chart 1 of the signal

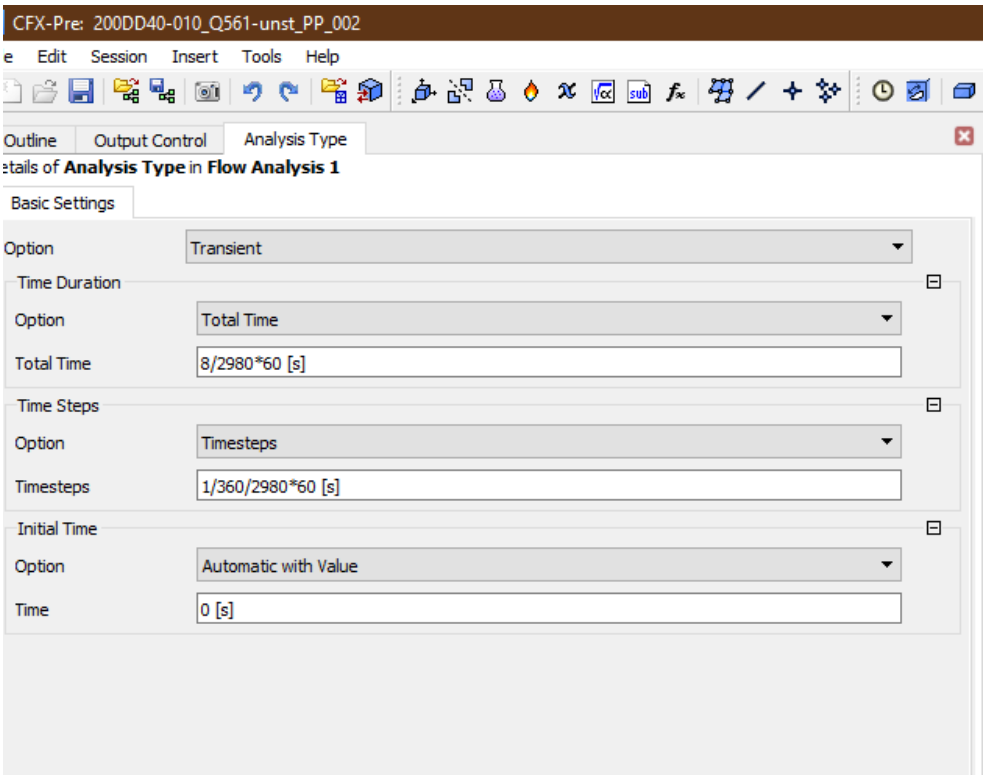

Figure 9: Setting the simulation timesteps

COPY COMPLIANT to the original document resident on the computer system at the time of printing

6. Set up the "*Data Series*" section, as in *Figure 10*, by setting the time on the x-axis and the desired "*Monitor Point*" (in this case the Monitor of Pressure Probe) on the y-axis.

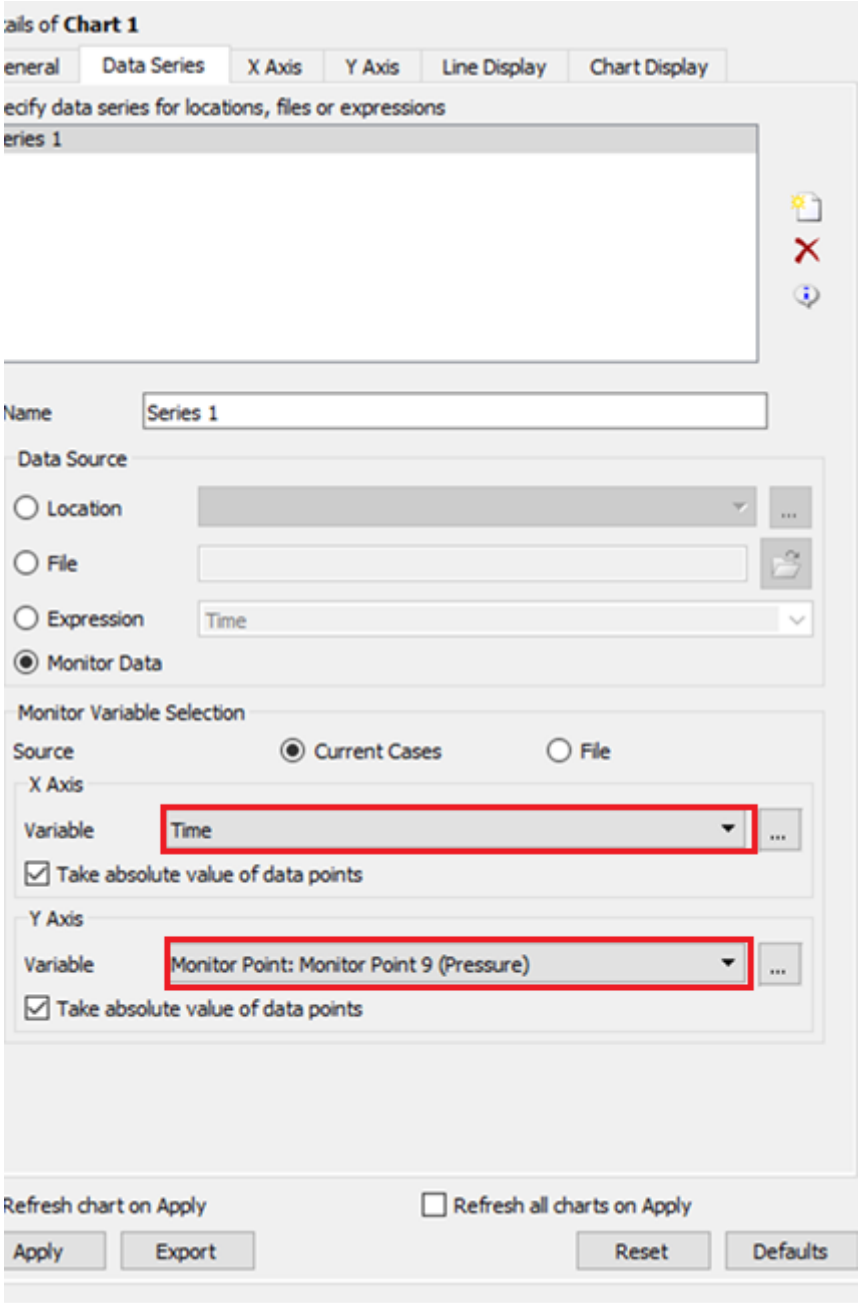

Figure 10: Data Series setting in Chart 1 to get the FFT of the signal

7. Once the "*Apply*" button is clicked, the result is shown in the graph to the right with the chosen X Axis, Y Axis, Line Display and Chart Display sections (*Figure 11*). Then, it is possible to export the result in .csv format and process it in Excel.

COPY COMPLIANT to the original document resident on the computer system at the time of printing

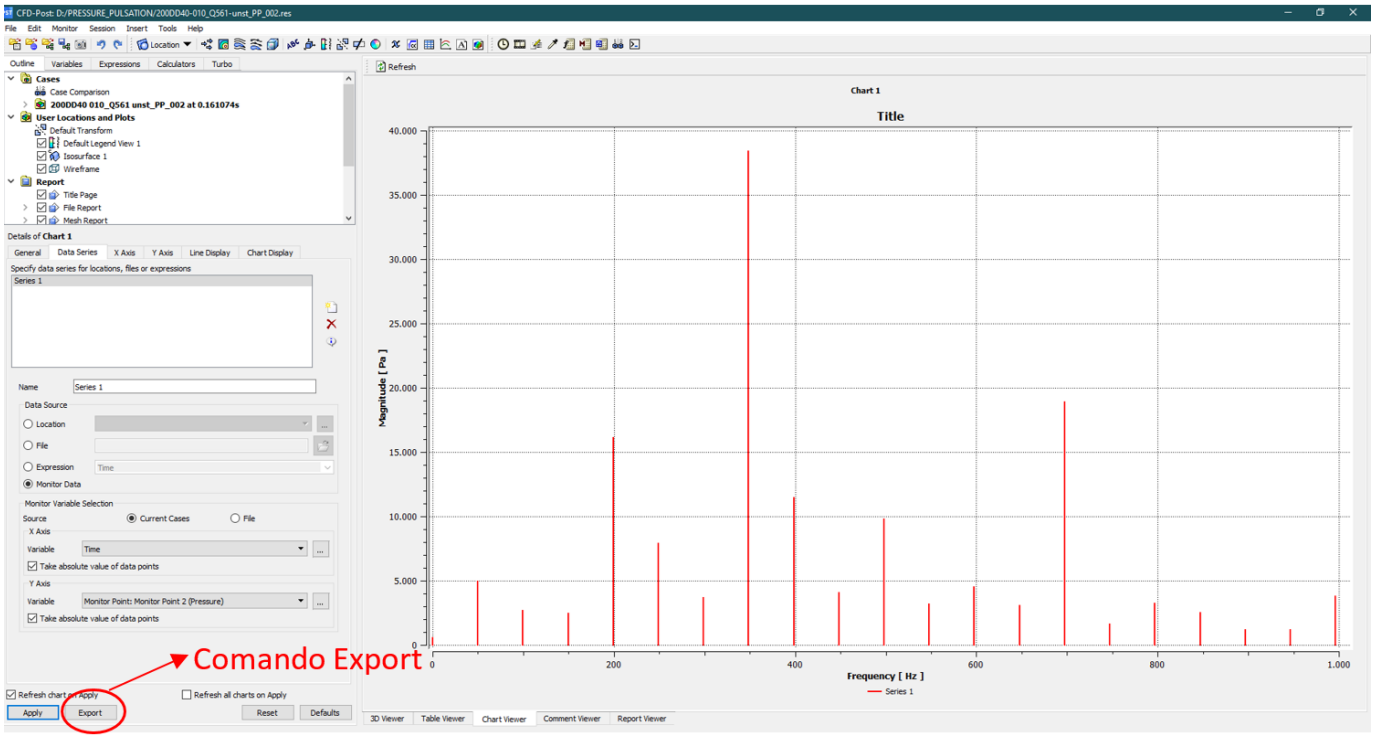

Figure 11: Chart 1 with the obtained Fourier Transform

8. Choice of the input data range: before analyzing the results of the analysis in detail, it is critical to underline the importance of choosing the correct range of input data (*Figure 8*) on which to perform the FFT.

   In *Figure 12,* it is possible to see how, by choosing a range that is too small (only one rotation represented as the orange curve), the frequencies and amplitude extracted may not be taken with sufficient accuracy.

   However, by choosing to obtain the FFT on the entire time range (in this case 8 rotations represented as the blue curve), we consider the first rotation in which the simulation has not yet reached complete convergence as well.

   It is therefore necessary to choose the data range considering only the time range in which the simulation has reached its own convergence, but at the same time, select a sufficient number of rotations to perform the FFT on a higher number of points.

COPY COMPLIANT to the original document resident on the computer system at the time of printing

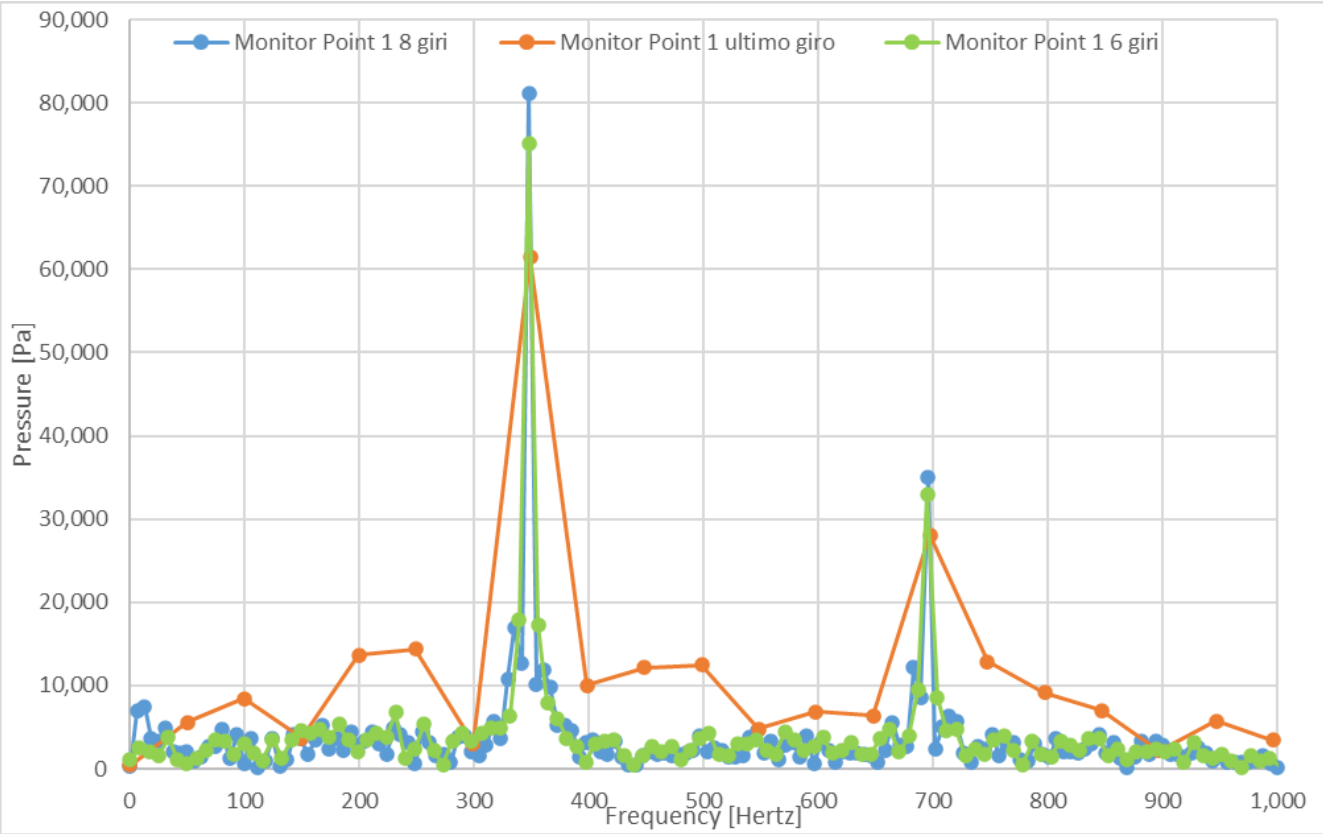

Figure 12: FFT's simulation of the Probe's Monitor on 8 rotations, 6 rotations and on the last rotation only

The amplitude and frequency of the transformed signal peaks provide information about the exciting forces; they can be used to understand how the mechanical system responds to these fluctuating stresses if correctly interpreted, whether it is subject to resonance phenomena or it is dynamically stable.

5.6. Video creation

Video creation is another methodology for analyzing unsteady results since it is possible to observe, over time through an animation, the graphical results obtained in the previous chapters: "Pressure and velocity contours" and "Streamlines visualization".

The analysis of these videos allows to better understand the physical phenomenon that develops over time inside the pump.

Since most of the fluctuating phenomena characterizing centrifugal pumps repeat themselves cyclically in an identical way, it is possible to set the video creation parameters according to appropriate criteria.

To understand the type of setting, it is required to know:

COPY COMPLIANT to the original document resident on the computer system at the time of printing

- The "*blade passing frequency*": it is certainly the predominant fluctuating phenomenon and can be calculated using the following relations:

$$speed\ pump = n\ [rpm]$$

$$numer\ of\ blade\ impeller = z_{la}$$

$$rotating\ angular\ velocity = \omega = 2\pi f_{impeller} = 2\pi * \frac{n}{60} = \frac{u}{r}$$

$$impeller\ period = T_{impeller} = \frac{60}{n} = \frac{1}{f_{impeller}}$$

$$impeller\ frequency = f_{impeller} = \frac{n}{60} = \frac{1}{T_{impeller}}$$

$$blade\ passing\ frequency = f = f_{impeller} * z_{la} = \frac{n}{60} * z_{la} = \frac{z_{la}}{T_{impeller}}$$

- The "*time-step*": is the interval that passes between the resolution of the simulation equations at two given instants in time, and is as important as the mesh size to capture and resolve the turbulence scales in detail; the formula is the following:

$$Time\ Step = \frac{number\ of\ timesteps\ for\ rotation}{60 * speed\ [rpm]}$$

- *"Number of timesteps for rotation"*: the selected value is 210 since it is a sufficiently accurate temporal discretization and is a multiple of 5 and 7, which are the typical values of the number of blades of an impeller.

$$number\ of\ timesteps\ for\ rotation = 210$$

To reach an acceptable state of convergence, 6 rotations of the impeller are necessary in general, and the number of timesteps for each turn is 210. It means that the simulation at 1260 timesteps will be convergent; only once this condition is reached, it is possible to set the video creation parameters.

Since the physical phenomena repeat themselves cyclically in an almost identical way during the "blade passing", it is possible to identify the elapsed number of timesteps within the "blade passing"; therefore:

- If the impeller has 5 blades, the selectable time steps from which the solution is extracted are 42 and their range is from timestep number 1261 to number 1303.
- If the impeller has 7 blades, the selectable time steps from which the solution is extracted are 30 and their range is from timestep number 1261 to number 1291.

COPY COMPLIANT to the original document resident on the computer system at the time of printing

The steps required to create the video are described in detail below. In addition, some figures taken from the *CFX Post tool in the Ansys environment* [6] are shown as an example:

1. In addition to the settings described in ***SOP-533*** *"CFD Pre-Processor for unsteady state analysis"* [4], in the section "*Output Control*" of CFX PRE, insert a "*Timestep List*" from which the results files will be saved as "file.trn" and select the seven "*Transient Variables*" described in *Chapter 5* (*Figure 13*). These additional results files will be saved during the Solver phase.
2. Select in CFX POST the graphic result obtained in the previous chapters: "Pressure and velocity contours" and "Streamlines visualization" for which you want to create the video.
3. Load all saved intermediate "file.trn" files into the main results file "file.res" (*Figure 14*).
4. Video setup in CFX POST (*Figure 15*):
   - "Start and End Timestep": select ranges (1261 – 1303) or (1261 – 1291).
   - Insert file name and save path.
   - *Video format:* usually .avi or .mp4.
   - *Video resolution:* example 1920x1080 for Full HD.
   - *Frame Rate:* for smooth animations 24 or 30 is recommended.

Once the setup is complete, you can start creating the video which will be automatically saved in the selected save folder.

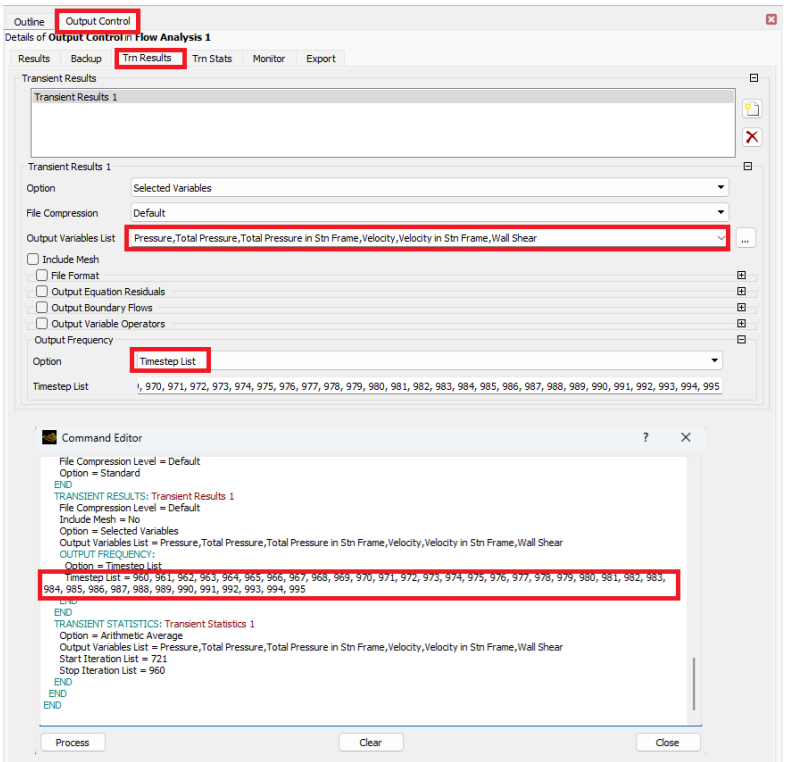

Figure 13: Timestep List: selection of variables and timestep

COPY COMPLIANT to the original document resident on the computer system at the time of printing

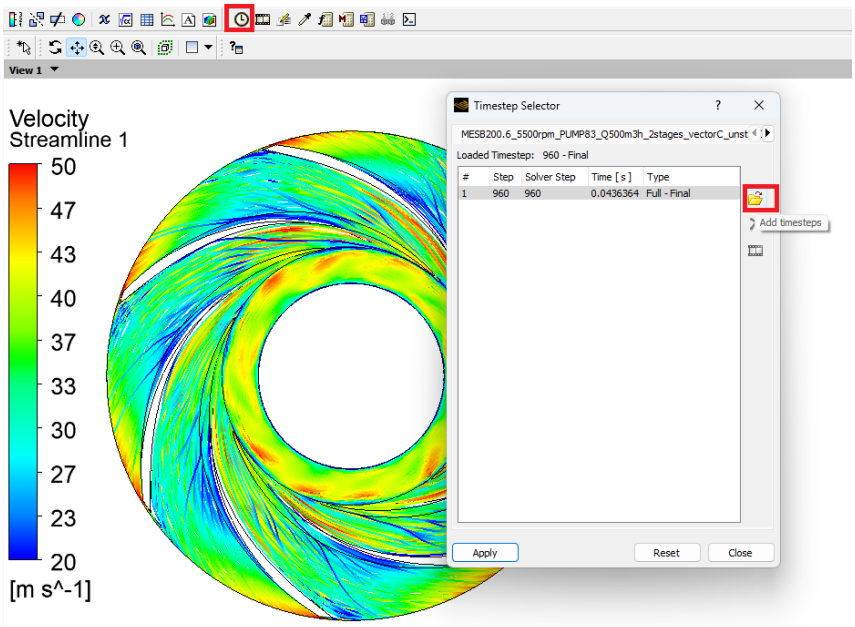

Figure 14: Timestep Selector: loading of file.trn

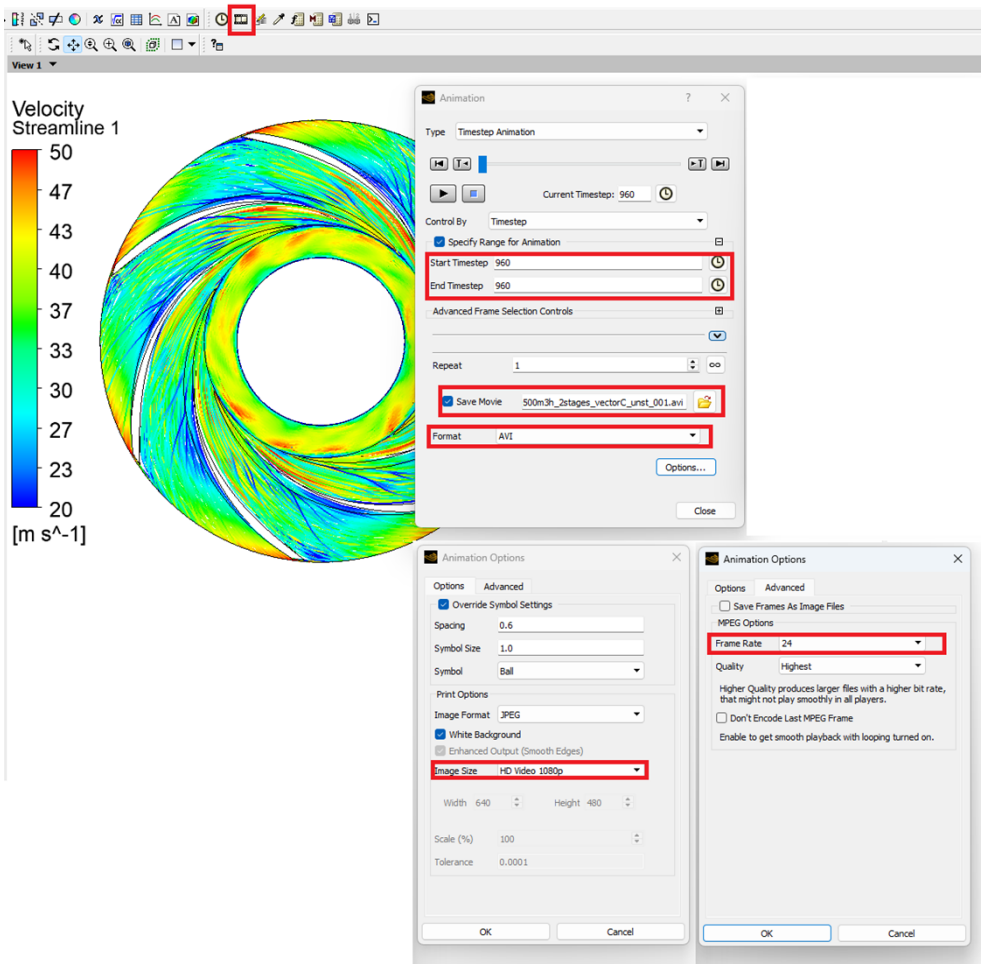

Figure 15: Animation: video settings

COPY COMPLIANT to the original document resident on the computer system at the time of printing

6. Acceptance criteria

Since the simulation is done in unsteady state, the solved variables undergo fluctuations over time; to correctly evaluate the level of convergence and accuracy of the solution, the monitored variables must be averaged over time and with a value close to the period of the oscillation that occurs for the specific variable.

The solution must be accepted only in case the fluctuation of the derivative values (like head, efficiency or absorbed power) are within a narrow range (±1%).

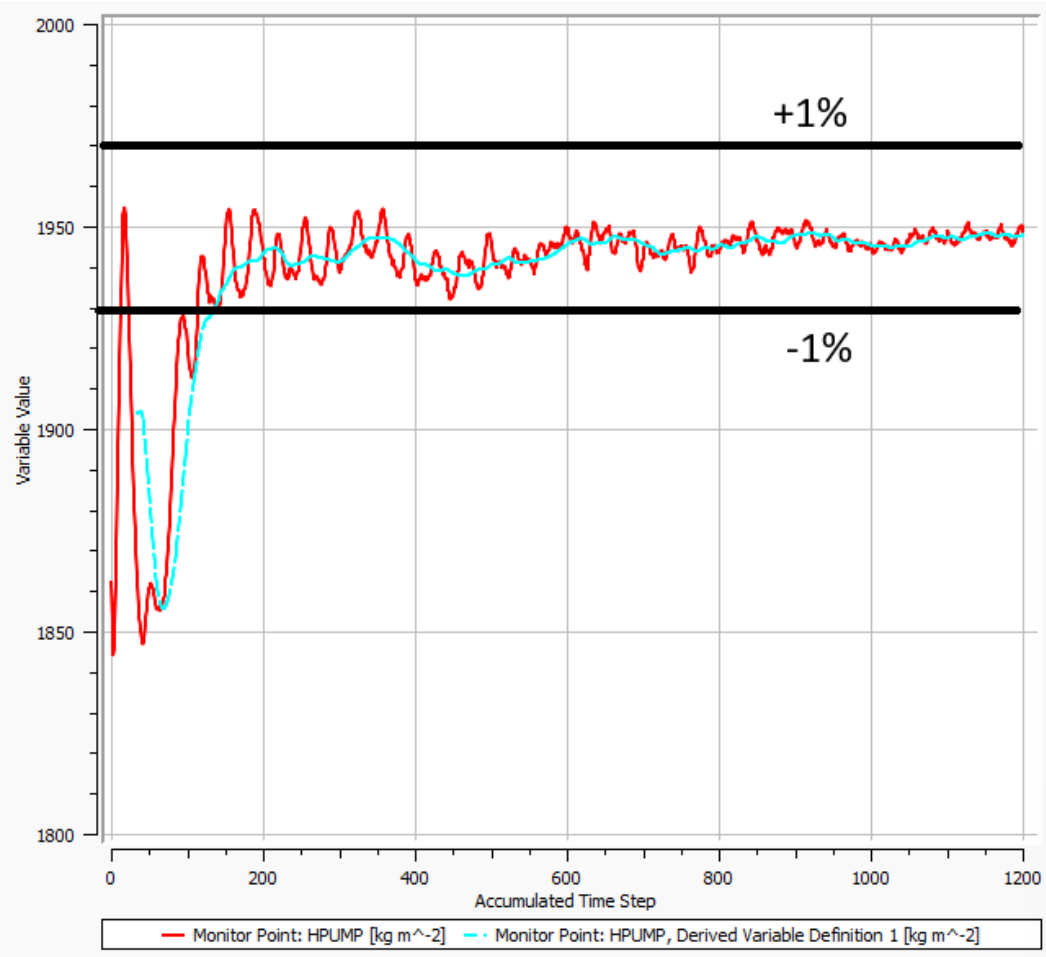

Figure 16: Fluctuation of the monitored variable during unsteady state simulation

Using a polar plot (*Figure 17*) can help to understand whether the signal is periodic and the value of its periodicity, to appropriately average the different variables over time.

COPY COMPLIANT to the original document resident on the computer system at the time of printing

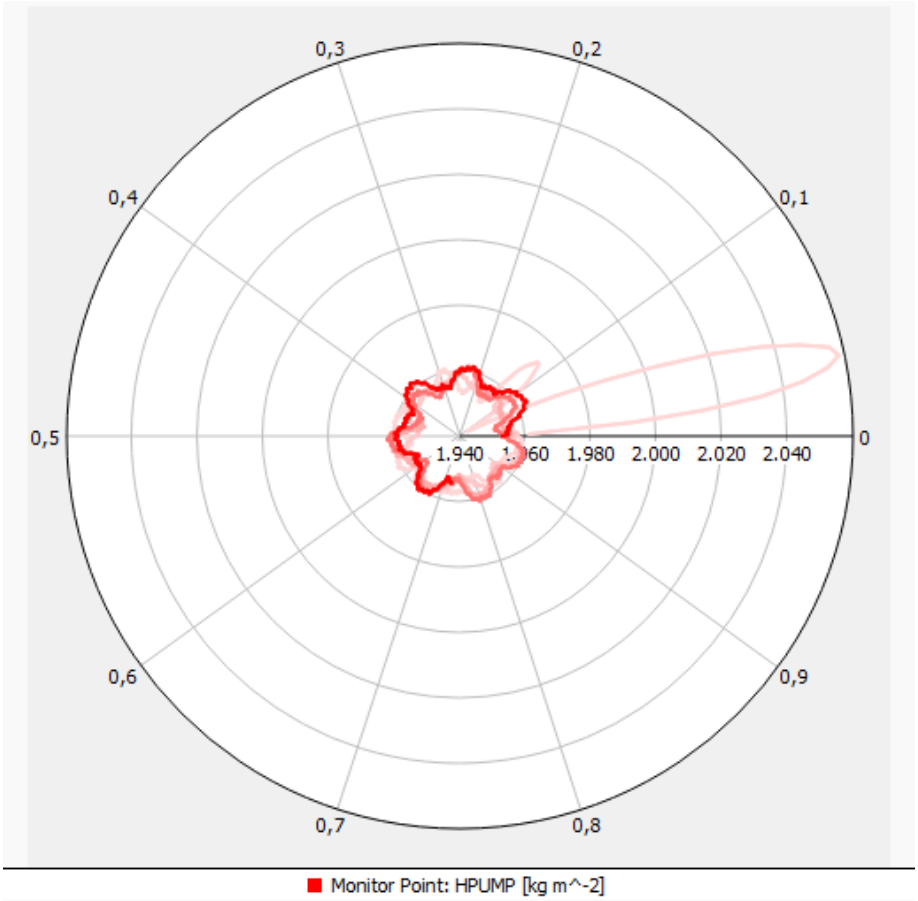

Figure 17: Polar chart showcasing the fluctuation of the monitored variable during unsteady state simulation

COPY COMPLIANT to the original document resident on the computer system at the time of printing

7. Limitations

This procedure is applicable exclusively for CFD analysis of pumps with unsteady state settings.

Multiphase approach (i.e. NPSH, gas+liquid, particle track analysis) is not considered in this procedure.

This procedure is intended to provide a global post processing setting to investigate the hydraulic performances of pumps and hydraulic pulsations.

No coupled fluid-structure interaction is provided. Only data for a segregated structural analysis can be given.

Due to the high speed of the flow crossing the pump, the analysis can be considered as isothermal. For this reason, no thermal post processing is provided into this procedure.

In case of analysis of pump with a long piping system embedded, deep investigation of the thermal aspect must be considered.

COPY COMPLIANT to the original document resident on the computer system at the time of printing

8. References

[1] Gulich "Centrifugal Pumps" ,4th.ed.

[2] Ansys User Manual

[3] SOP 551 "CFD Post-Processing for Impeller Passages"

[4] SOP-533 "CFD Pre-Processor for unsteady state analysis"

[5] SOP-552 "CFD Post-Processing for steady state analysis"

[6] Ansys CFX PRE

COPY COMPLIANT to the original document resident on the computer system at the time of printing